TRABAJOS DE TORNEADO

ROSCADO

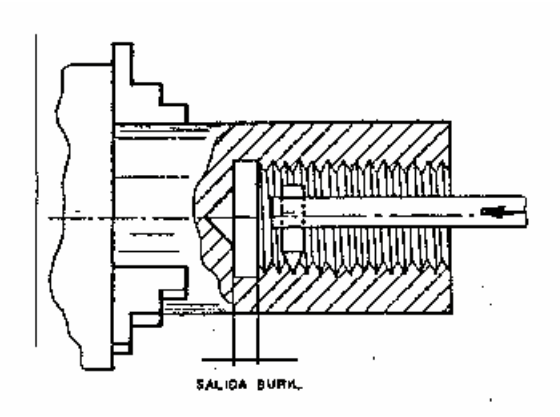

Roscado interior con buril

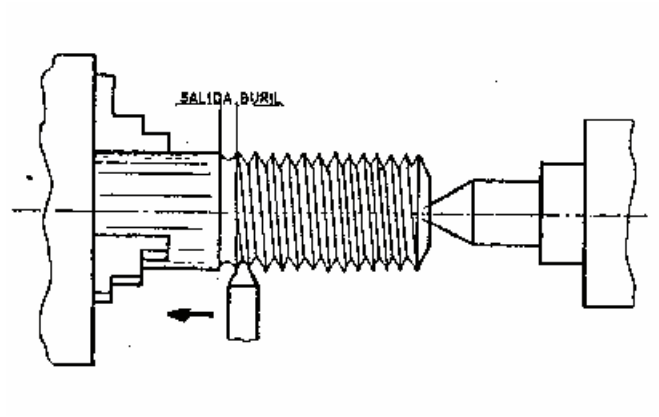

Roscado exterior con buril

TRABAJOS DE TORNEADO

ROSCADO INTERIOR CON PIEZA FIJA

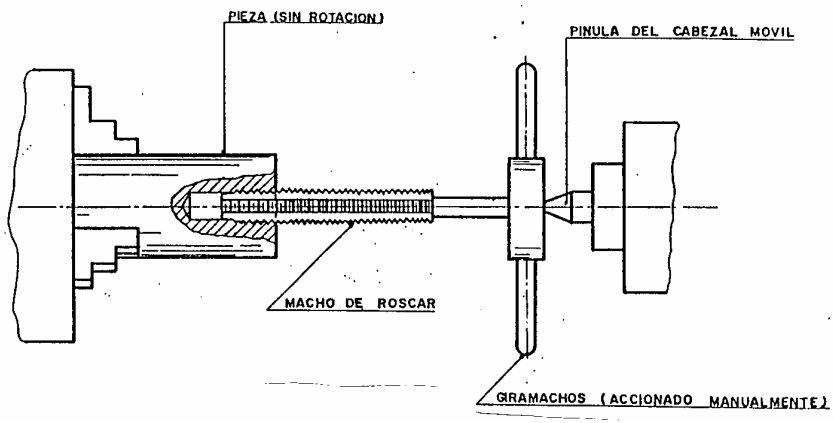

ROSCADO EXTERIOR CON PIEZA FIJA

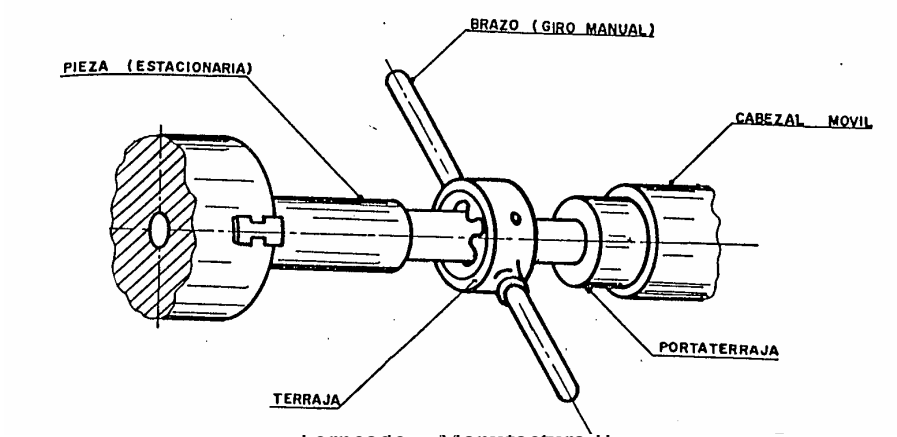

CÁLCULO DE ENGRANES PARA LA EJECUCIÓN DE ROSCAS

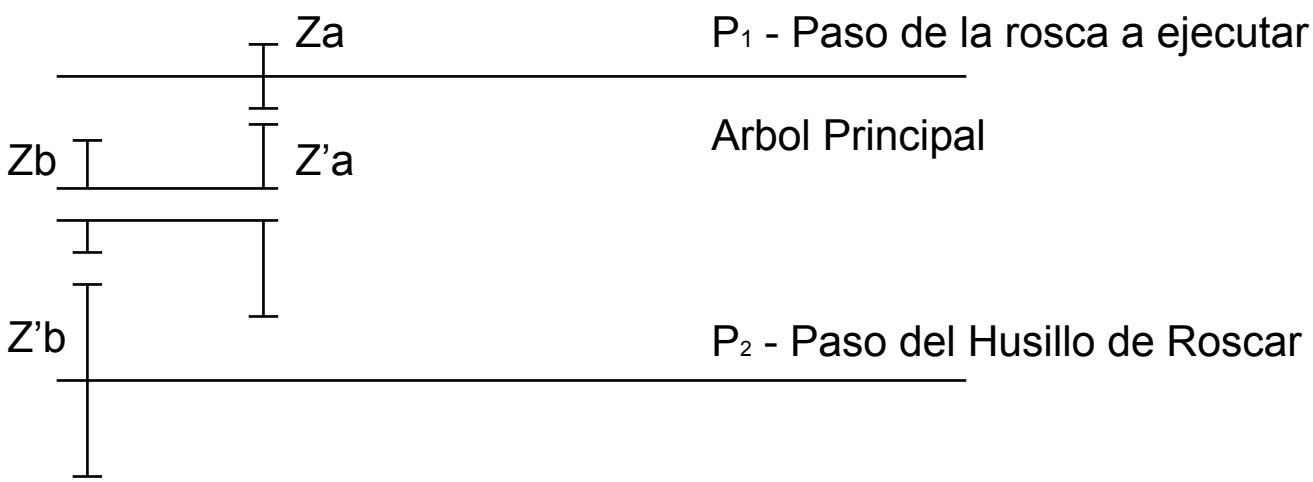

Za, Zb, Zc - Número de dientes de los engranes conductores.

Za', Zb', Zc' - Número de dientes de los engranes conducidos.

$$\frac{P1}{P2} = \frac{Za \times Zb \times ...Zn}{Za' \times Zb' \times ...Z'n}$$

CÁLCULO DE ENGRANES PARA LA EJECUCIÓN DE ROSCAS

Ejemplo: Se tienen disponibles engranes de recambio de 15, 20, 25, …, 150 dientes.

1) Determinar la combinación de ruedas para hacer una rosca con paso de 1mm con un paso del husillo de roscar de 5mm.

$$\frac{P_1}{P_2} = \frac{1}{5} = \frac{1}{5} \times \frac{15}{15} = \frac{15}{75} = \frac{Za}{Z'a}$$

2) P_1=4.25 mm, y P_2 = 10 mm

$$\frac{P_1}{P_2} = \frac{4.25}{10} = \frac{425}{1000} = \frac{25 \times 17}{20 \times 50} = \frac{25}{20} \times \frac{17 \times 5}{50 \times 5} = \frac{25 \times 85}{100 \times 50} = \frac{Za \times Zb}{Za' \times Zb'}$$

3) P_1=8, y P_2 = 4 hilos/pulg

$$\frac{P_1}{P_2} = \frac{8}{\frac{25.4}{4}} = \frac{32}{25.4} = \frac{320}{254} = \frac{80 \times 4}{127 \times 2} \times \frac{15}{15} = \frac{80 \times 60}{127 \times 30} = \frac{Za \times Zb}{Za' \times Zb'}$$

ROSCAS

ISO

ISO metric screw threads (coarse pitch threads) following DIN 13 Part 1, 12.86 edition

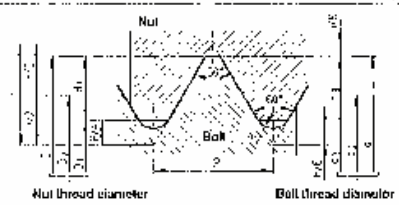

$D_1 = d - 2\,H_1$

$d_2 = D_2 = d - 0.64952\,P$

$d_3 = d - 1.22687\,P$

$H = 0.86603\,P$

$H_1 = 0.54127\,P$

$h_3 = 0.61343\,P$

$R = \frac{H}{6} = 0.14434\,P$

Diameters of series 1 should be preferred to those of series 2, and these again to those of series 3.

Nominal thread diameter d = D Series 1	Series 2	Series 3	Pitch P mm	Pitch diameter $d_2 = D_2$ mm	Core diameter d_3 mm	Core diameter D_1 mm	Depth of thread h_3 mm	Depth of thread H_1 mm	Round R mm	Tensile stress cross-section A_s 1) mm²
3			0.5	2.675	2.387	2.459	0.307	0.271	0.072	5.03
	3.5		0.6	3.110	2.764	2.850	0.368	0.325	0.087	6.78
4			0.7	3.545	3.141	3.242	0.429	0.379	0.101	8.78
	4.5		0.75	4.013	3.580	3.688	0.460	0.406	0.108	11.3
5			0.8	4.480	4.019	4.134	0.491	0.433	0.115	14.2
6			1	5.350	4.773	4.917	0.613	0.541	0.144	20.1
		7	1	6.350	5.773	5.917	0.613	0.541	0.144	28.9
8			1.25	7.188	6.466	6.647	0.767	0.677	0.180	36.6
		9	1.25	8.188	7.466	7.647	0.767	0.677	0.180	48.1
10			1.5	9.026	8.160	8.376	0.920	0.812	0.217	58.0
		11	1.5	10.026	9.160	9.376	0.920	0.812	0.217	72.3
12			1.75	10.863	9.853	10.106	1.074	0.947	0.253	84.3
	14		2	12.701	11.546	11.835	1.227	1.083	0.289	115
16			2	14.701	13.546	13.835	1.227	1.083	0.289	157
	18		2.5	16.376	14.933	15.294	1.534	1.353	0.361	192
20			2.5	18.376	16.933	17.294	1.534	1.353	0.361	245
	22		2.5	20.376	18.933	19.294	1.534	1.353	0.361	303
24			3	22.051	20.319	20.752	1.840	1.624	0.433	353
	27		3	25.051	23.319	23.752	1.840	1.624	0.433	459
30			3.5	27.727	25.706	26.211	2.147	1.894	0.505	561
	33		3.5	30.727	28.706	29.211	2.147	1.894	0.505	694
36			4	33.402	31.093	31.670	2.454	2.165	0.577	817
	39		4	36.402	34.093	34.670	2.454	2.165	0.577	976
42			4.5	39.077	36.479	37.129	2.760	2.436	0.650	1121
	45		4.5	42.077	39.479	40.129	2.760	2.436	0.650	1306
48			5	44.752	41.866	42.587	3.067	2.706	0.722	1473
	52		5	48.752	45.866	46.587	3.067	2.706	0.722	1758
56			5.5	52.428	49.252	50.046	3.374	2.977	0.794	2030
	60		5.5	56.428	53.252	54.046	3.374	2.977	0.794	2362
64			6	60.103	56.639	57.505	3.681	3.248	0.866	2676
	68		6	64.103	60.639	61.505	3.681	3.248	0.866	3055

1) The tensile stress cross-section is calculated acc. to DIN 13 Part 28 with formula $A_s = \frac{\pi}{4} \cdot \left(\frac{d_2 + d_3}{2}\right)^2$

UNIFICADAS AMERICANAS

Dimensión	Filetes/pul UNC	Filetes/pul UNF	Diámetro primitivo UNC	Diámetro primitivo UNF	Diámetro menor Rosca externa UNC	Diámetro menor Rosca externa UNF	Diámetro menor Rosca interna UNC	Diámetro menor Rosca interna UNF
0 (0.060)		80		0.0519		0.0447		0.0465
1 (0.073)	64	72	0.0629	0.0640	0.0538	0.0560	0.0561	0.0580
2 (0.086)	56	64	0.0744	0.0759	0.0641	0.0668	0.0667	0.0691
3 (0.099)	48	56	0.0855	0.0874	0.0734	0.0771	0.0764	0.0797
4 (0.110)	40	48	0.0928	0.0985	0.0813	0.0864	0.0849	0.0894
5 (0.125)	40	44	0.1088	0.1102	0.0943	0.0971	0.0979	0.1004
6 (0.138)	32	40	0.1177	0.1218	0.0997	0.1073	0.1042	0.1109
8 (0.164)	32	36	0.1437	0.1460	0.1257	0.1299	0.1303	0.1339
10 (0.190)	24	32	0.1629	0.1697	0.1389	0.1517	0.1449	0.1562
12 (0.216)	24	28	0.1889	0.1928	0.1649	0.1722	0.1709	0.1773
1/4	20	28	0.2175	0.2268	0.1887	0.2062	0.1959	0.2113
5/16	18	24	0.2764	0.2854	0.2443	0.2644	0.2524	0.2674
3/8	16	24	0.3344	0.3479	0.2983	0.3239	0.3073	0.3299
7/16	14	20	0.3911	0.4050	0.3499	0.3762	0.3602	0.3834
1/2	13	20	0.4500	0.4675	0.4056	0.4387	0.4167	0.4459
9/16	12	18	0.5084	0.5264	0.4603	0.4943	0.4733	0.5024
5/8	11	18	0.5660	0.5889	0.5135	0.5568	0.5266	0.5649
3/4	10	16	0.6850	0.7094	0.6173	0.6733	0.6417	0.6823
7/8	9	14	0.8028	0.8286	0.7387	0.7874	0.7547	0.7977
1	8	12	0.9188	0.9459	0.8466	0.8978	0.8647	0.9098
1-1/8	7	12	1.0322	1.0709	0.9497	1.0228	0.9704	1.0348
1-1/4	7	12	1.1572	1.1959	1.0747	1.1478	1.0954	1.1598
1-3/8	6	12	1.2667	1.3209	1.1705	1.2728	1.1946	1.2848
1-1/2	6	12	1.3917	1.4459	1.2955	1.3978	1.3196	1.4098
1-3/4	5		1.6201		1.5016		1.5335	
2	4-1/2		1.8557		1.7274		1.7594	
2-1/4	4-1/2		2.1057		1.9774		2.0094	
2-1/2	4		2.3376		2.1933		2.2294	
2-3/4	4		2.5876		2.4433		2.4794	
3	4		2.8376		2.6933		2.7294	
3-1/4	4		3.0876		2.9433		2.9794	
3-1/2	4		3.3376		3.1933		3.2294	
3-3/4	4		3.5876		3.4433		3.4794	
4	4		3.8376		3.6933		3.7294	